REMOVAL

1. DISCONNECT BATTERY NEGATIVE TERMINAL

2. REMOVE FRONT WHEEL RH

3. REMOVE ENGINE UNDER COVER RH

4. REMOVE CYLINDER HEAD COVER NO.2

(a) Remove the 2 nuts and 2 clips, then remove the cylinder head cover No. 2.

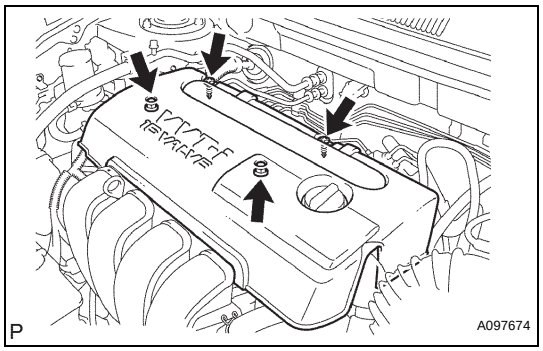

5. DRAIN ENGINE COOLANT

(a) Drain the engine coolant (See page CO-5).

6. REMOVE FAN AND GENERATOR V BELT

(a) Remove the fan and generator V belt (See page EM-5).

7. SEPARATE VANE PUMP ASSEMBLY

(a) Separate the vane pump assembly (See page PS-7).

8. REMOVE GENERATOR ASSEMBLY

(a) Remove the generator assembly (See page CH-6).

9. REMOVE ENGINE MOUNTING INSULATOR RH

(a) Remove the 2 bolts, then remove the oil reservoir bracket No. 1.

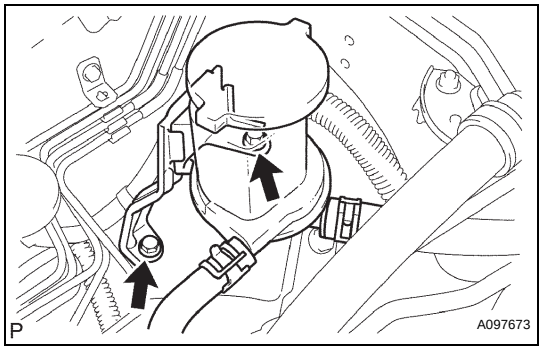

(b) Place a wooden block on a jack underneath the engine.

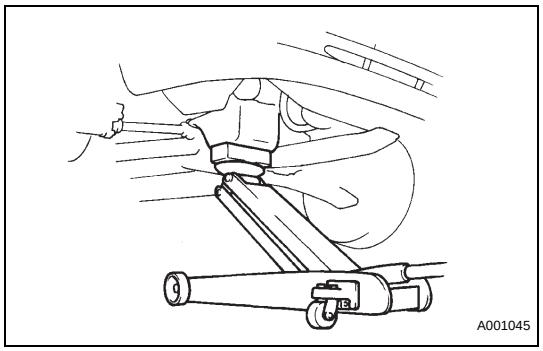

(c) Remove the 4 bolts and 2 nuts, then remove the engine mounting insulator RH.

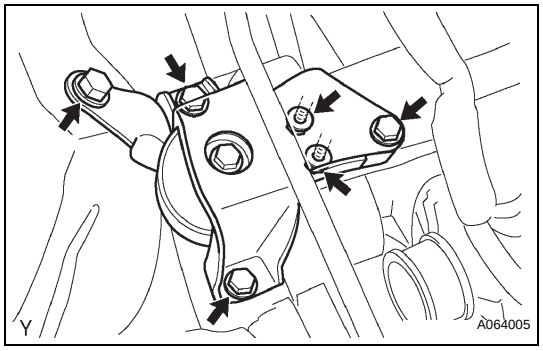

EM

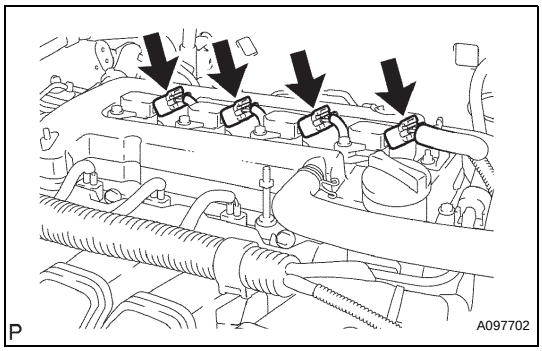

10. REMOVE IGNITION COIL ASSEMBLY

(a) Disconnect the 4 ignition coil connectors.

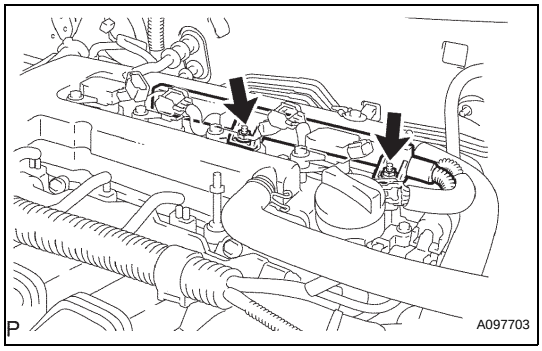

(b) Remove the 2 nuts, then separate the engine wire.

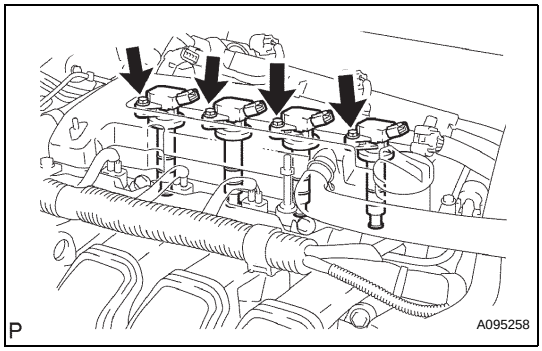

(c) Remove the 4 bolts, then remove the 4 ignition coils.

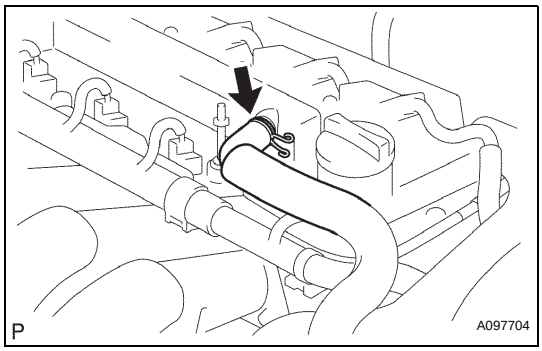

11. REMOVE CYLINDER HEAD COVER SUB-ASSEMBLY

(a) Disconnect the ventilation hose from the cylinder head cover.

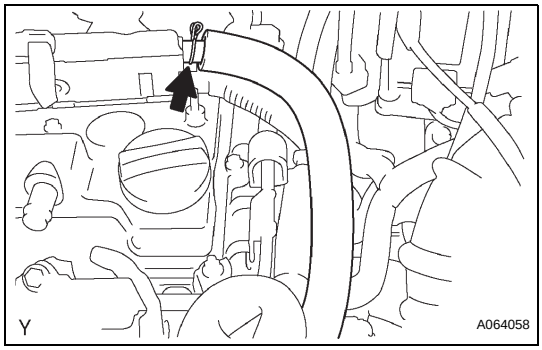

(b) Disconnect the ventilation hose No. 2 from the ventilation valve.

(c) Remove the 3 clamps of the engine wire from the clamp bracket.

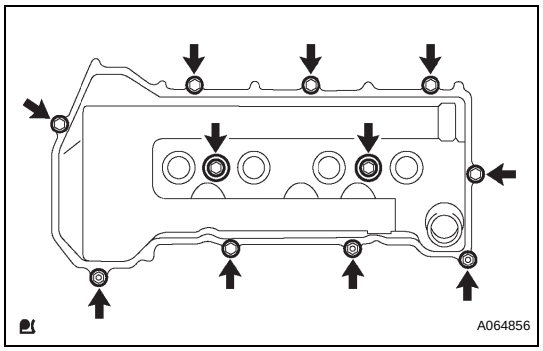

(d) Remove the 9 bolts, 2 seal washers, 2 nuts and 3 clamp brackets, then remove the cylinder head cover.

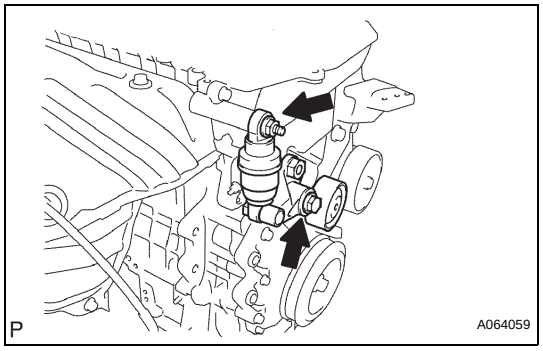

12. REMOVE V-RIBBED BELT TENSIONER ASSEMBLY

(a) Remove the bolt and nut, then remove the V-ribbed belt tensioner.
HINT:
Jack the engine up and down to remove the bolt.

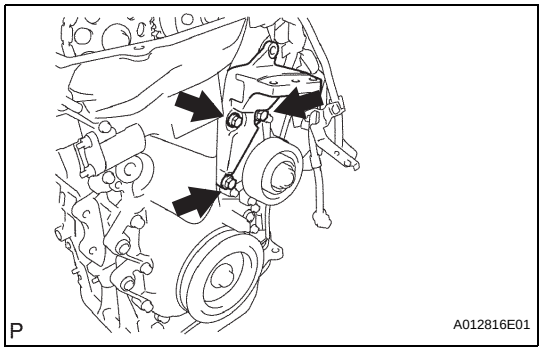

13. REMOVE ENGINE MOUNTING BRACKET RH

(a) Remove the 3 bolts, then remove the engine mounting bracket RH.

14. REMOVE WATER PUMP ASSEMBLY

(a) Remove the water pump assembly (See page CO-9).

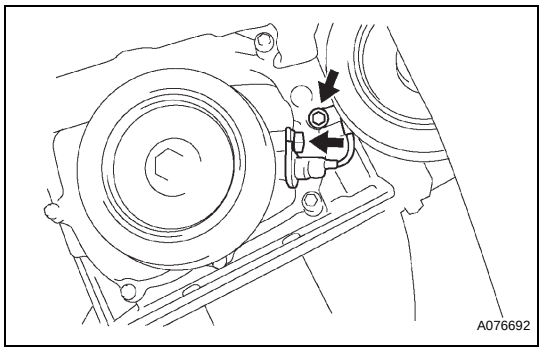

15. SEPARATE CRANKSHAFT POSITION SENSOR

(a) Remove the 2 bolts, then separate the crankshaft position sensor.

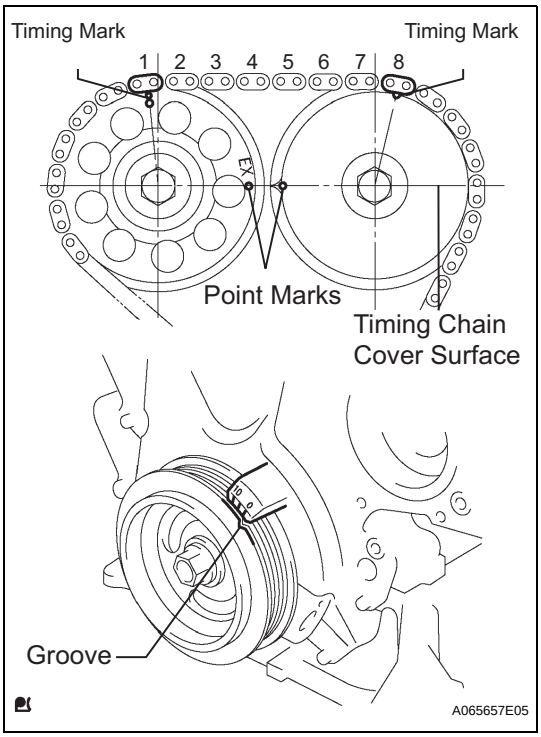

16. SET NO. 1 CYLINDER TO TDC / COMPRESSION

(a) Turn the crankshaft pulley until its groove and timing mark "0" of the timing chain cover are aligned.

(b) Check that the point marks of the camshaft timing gears are in a straight line on the timing chain cover surface as shown in the illustration.
If not, turn the crankshaft 1 revolution (360°) to align the marks as above.

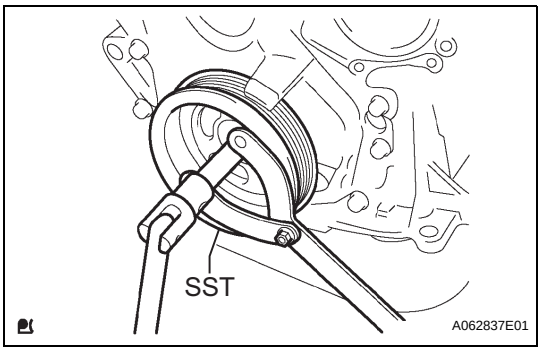

17. REMOVE CRANKSHAFT PULLEY

(a) Using SST, remove the crankshaft pulley bolt.
SST 09960-10010 (09962-01000, 09963-01000)

(b) Remove the crankshaft pulley from the crankshaft.

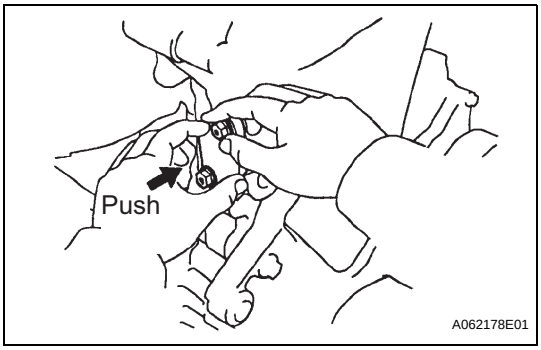

18. REMOVE CHAIN TENSIONER ASSEMBLY NO.1

(a) Remove the 2 nuts, then remove the chain tensioner.
NOTICE:
Do not turn the crankshaft without the chain tensioner.

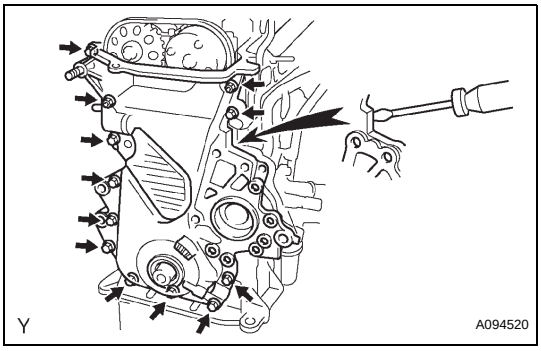

19. REMOVE TIMING CHAIN OR BELT COVER SUB-ASSEMBLY

(a) Remove the 10 bolts and 2 nuts.

(b) Using a "TORX" socket wrench (E8), remove the stud bolt.

(c) Remove the timing chain cover by prying the portions between the timing chain cover, cylinder head and cylinder block with a screwdriver.
NOTICE:
Be careful not to damage the contact surfaces of the timing chain cover, cylinder head and cylinder block.

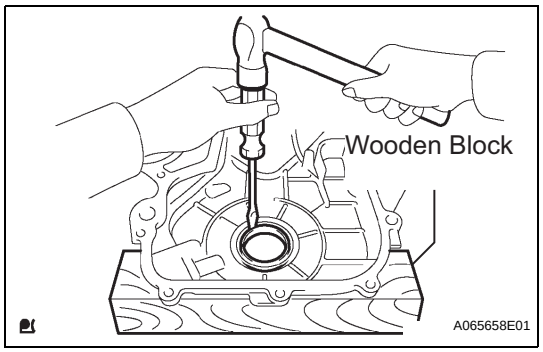

20. REMOVE TIMING CHAIN OR BELT COVER OIL SEAL
(a) Place the timing chain cover on wooden blocks.
(b) Using a screwdriver, remove the oil seal.

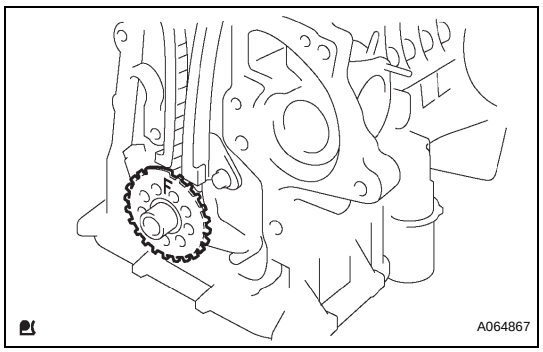

21. REMOVE CRANKSHAFT POSITION SENSOR PLATE NO.1
(a) Remove the crankshaft position sensor plate from the crankshaft.

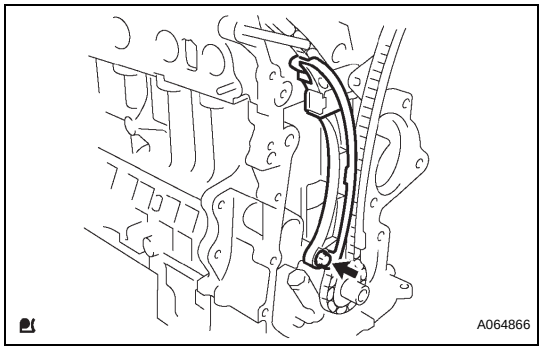

22. REMOVE CHAIN TENSIONER SLIPPER
(a) Remove the bolt, then remove the chain tensioner slipper.

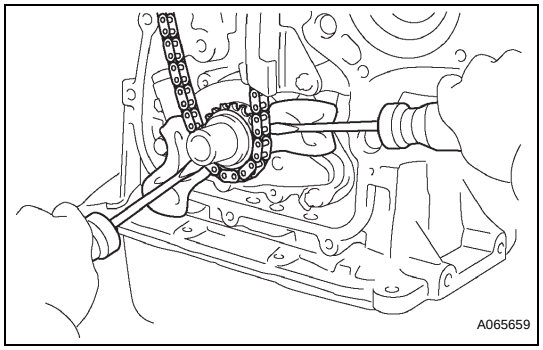

23. REMOVE CHAIN SUB-ASSEMBLY
(a) Using 2 screwdrivers, pry out the chain with the crankshaft timing gear, as shown in the illustration.
NOTICE:
- **Use a shop rag or piece of cloth to protect the engine.**
- **If revolving the camshafts with the chain off the gears, turn the crankshaft 1/4 revolution to prevent the valves from coming into contact with the pistons.**